REV	DESCRIPTION	DATE	BY	APP.

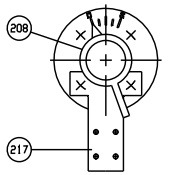

Detail for Limit switch

DETAIL INDICATOR
NONE SCALE

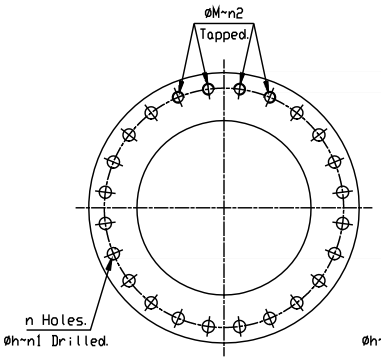

Detail A
Flange drilling for size 20" only.

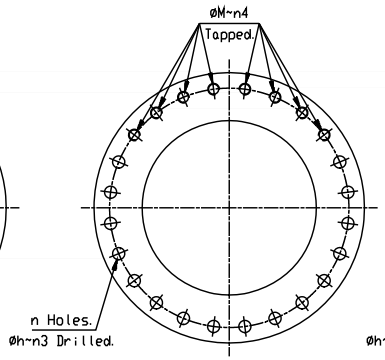

Detail B
Flange drilling for size 20" only.

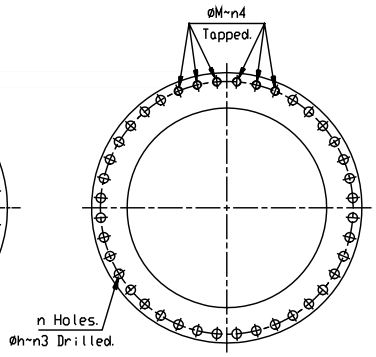

Detail B
Flange drilling for size 48" only.

Marking

Pratt

SIZE

250

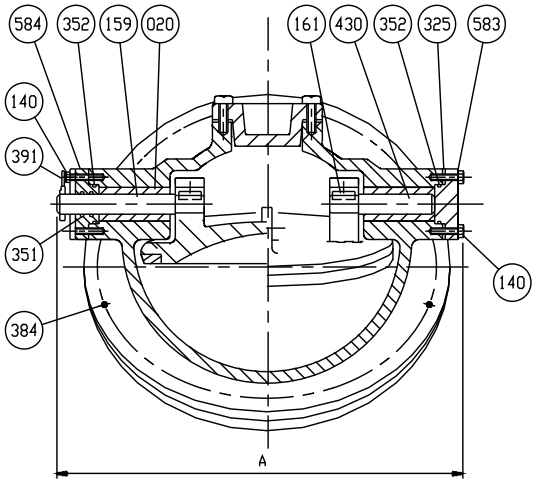

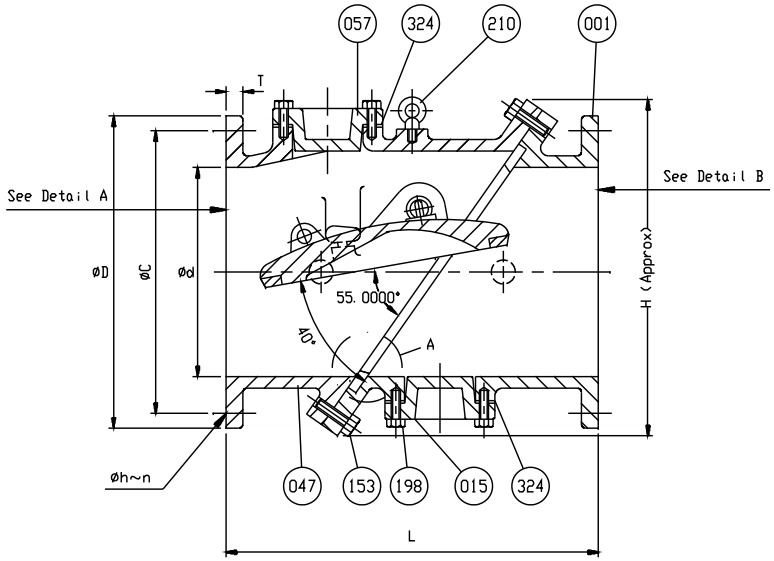

NO.	PARTS	MATERIAL	ASTM. DESIGN.	Q' TY
584	End Plate D	Bronze	B 62	1
583	End Plate C	Ductile Iron	A 536 Gr. 65-45-12	1
430	Hinge Pin B	Stainless Steel	A 276 Type 304	1
391	Needle	Aluminium	———	1
384	Pin	Stainless Steel	A 276 Type 304	2
355	Body O-Ring	Rubber (Buna N)	D 2000 BK 707	1
354	Disc O-Ring	Rubber (Buna N)	D 2000 BK 707	1
355	Body O-Ring	Rubber (Buna N)	D 2000 BK 707	1
354	Disc O-Ring	Rubber (Buna N)	D 2000 BK 707	1
353	O-Ring D	Rubber (Buna N)	D 2000 BK 707	1
352	O-Ring C	Rubber (Buna N)	D 2000 BK 707	2
351	O-Ring B	Rubber (Buna N)	D 2000 BK 707	2
325	End Plate Gasket	Non Asbestos Sheet	———	2
324	Gasket A, B	Non Asbestos Sheet	———	2
234	Socket Head Bolt	Stainless Steel	A 276 Type 304	1 SET
217	Limit Switch Arm	Galvanized Steel	———	1
210	Eye Bolt	Galvanized Steel	———	1
208	Cam	Galvanized Steel	———	1
198	End Plate Bolt A, B	Zinc Coated Steel	A 307 Grade B	2 SET
161	Key	Stainless Steel	A 276 Type 304	2
159	Hinge Pin A	Stainless Steel	A 276 Type 304	1
153	Body Bolt	Zinc Coated Steel	A 307 Grade B	1 SET
140	End Plate Bolt C, D	Zinc Coated Steel	A 307 Grade B	2 SET
062	Disc Seat Ring	Stainless Steel	A 276 Type 304	1
061	Body Seat Ring	Stainless Steel	A 276 Type 304	1
057	End Plate (B)	Ductile Iron	A 536 Gr. 65-45-12	1
047	Body B.	Ductile Iron	A 536 Gr. 65-45-12	1
020	Sleeve	Bronze	B 62	2
015	End Plate (A)	Ductile Iron	A 536 Gr. 65-45-12	1
003	Disc	Ductile Iron	A 536 Gr. 65-45-12	1
001	Body A.	Ductile Iron	A 536 Gr. 65-45-12	1

MATERIAL LIST

HYDRO SHELL	500	PSI.
HYDRO VALVE SEAT	250	PSI.
HYDRO BACK SEAT	—	PSI.
AIR SEAT	—	PSI.
STEAM	—	PSI.
TEST PRESSURE		
WORKING PRESSURE	250	PSI.

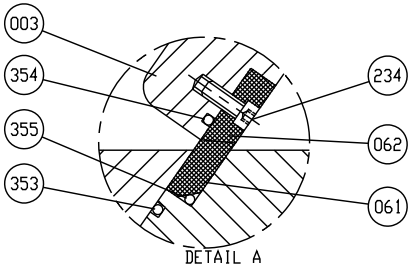

DETAIL A
NONE SCALE

SIZE ød	L	ANSI B16.1 CL. 250					A	H	øM	n1	n2	n3	n4	MODEL NO.
		øD	øC	øh	n	T								
14	30	23	20¼	1¼	20	2⅛	29	23¾	-	-	-	-	-	TD 141
16	30	25½	22½	1⅜	20	2¼	32	26¾	-	-	-	-	-	TD 161
18	33	28	24¾	1⅜	24	2⅜	36	30	-	-	-	-	-	TD 161
20	32	30½	27	1⅜	24	2½	39	32	1¼x7TPI (UNC)	20	4	16	8	TD 201
24	38	36	32	1⅝	24	2¾	46	37	-	-	-	-	-	TD 241
30	52	43	39¼	2	28	3	54	47	-	-	-	-	-	TD 301
36	59½	50	46	2¼	32	3⅜	64	51	-	-	-	-	-	TD 361
42	62½	57	52¾	2¼	36	3 11/16	68	60	-	-	-	-	-	TD 421
48	65	65	60¾	2¼	40	4	85	68½	2x4½TPI (UNC)	-	-	34	6	TD 481

PRATT
a MUELLER brand

TOLERANCES UNLESS OTHERWISE NOTED		SCALE	DR.	DATE	REF. DWG.
4 PLACE DEC.	±.0005	N.T.S.	J. LESH	11/05/19	USA2260D
3 PLACE DEC.	±.005		CHK. JL / APP.	E.C.N.	USA2265D
2 PLACE DEC.	±.01				USA2691B
FRACTIONAL	±1/64				
ANGULAR	±1/2°				
MACH. FIN.	63 √				
BREAK SHARP EDGES	.015 MAX.				

TITLE: TILTED DISC VALVE AWWA C508 14"-48"

MODEL: 67125 | DWG NO. GA-12548 | REV. 0