PRATT
Henry Pratt Company

HENRY PRATT COMPANY
401 S HIGHLAND
AURORA, IL 60506
PHONE: (877) 436-7977
www.henrypratt.com

GENERAL ARRANGEMENT DRAWING
2 150# RUBBER SEATED BALL VALVE
MDT MANUAL ACTUATOR

DRAWING NO.	
S-2015	
DATE 05-07-01	
BY MJH	APP. DWB

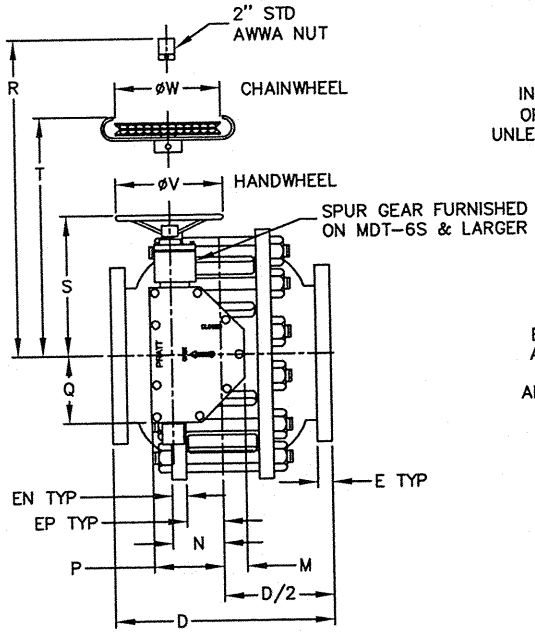

ACTUATOR POSITION 01

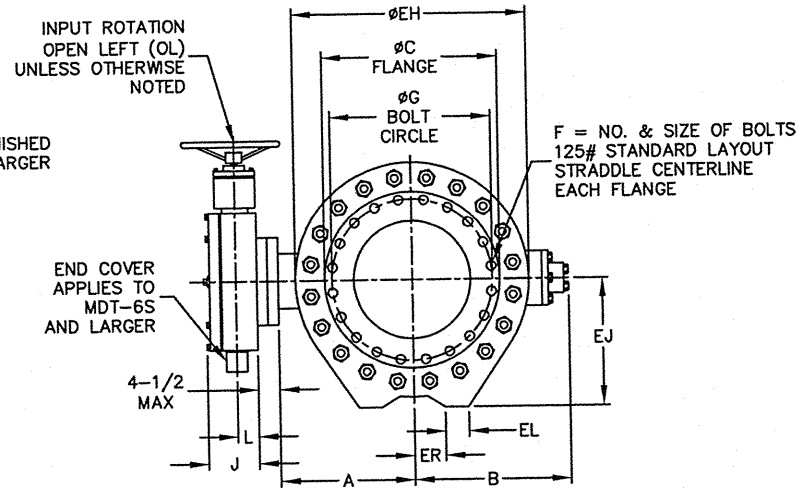

A — SEAT SIDE FOR TIGHT SHUTOFF IN THIS DIRECTION

B — SEAT SIDE FOR TIGHT SHUTOFF IN THIS DIRECTION

NOTES:

1. ALL DIMENSIONS SHOWN IN INCHES.
2. "D" DIMENSION ±1/8".
3. FOR BOLTS SMALLER THAN ø1-3/4, BOLT HOLES WILL BE 1/8" LARGER THAN DIAMETER OF BOLT. FOR BOLTS ø1-3/4 OR LARGER, BOLT HOLES WILL BE 1/4" LARGER THAN DIAMETER OF BOLT.
4. DIMENSIONS AND DRILLING OF END FLANGES CONFORM TO THE AMERICAN CAST IRON FLANGE STANDARDS, CLASS 125 (B16.1).
5. VALVES MANUFACTURED & TESTED IN ACCORDANCE WITH AWWA SPECIFICATION C-507 LATEST REVISION, CLASS 150.
6. RECOMMENDATION FOR MATING FLANGES: WHERE INSULATING BUSHINGS ARE USED, IT IS NECESSARY THAT BOLT HOLES BE DRILLED OVERSIZE BY AN AMOUNT EQUAL TO TWO TIMES THE INSULATING SLEEVE THICKNESS TO MAINTAIN THE SAME MINIMUM CLEARANCE FOR BOLTS.
7. VALVE ROTOR SHOWN IN OPEN POSITION.
8. CAUTION: IT IS RECOMMENDED THAT VALVES BE INSTALLED INTO THE PIPING SYSTEM IN ACCORDANCE WITH AWWA M-11 IN ORDER TO PREVENT ANY UNDUE PIPING STRESS, DEFLECTION OR BENDING THAT MAY EFFECT THE PERFORMANCE OF THE VALVE.

3 VALVE SIZE	A	B	C	D	E	F	G	EH	EJ	EL	EN	EP	ER
4	9-7/8	12-1/4	9	13	1-1/4	8 x 5/8	7-1/2	14-1/4	8-1/8	2-5/16	7/8	2	2-15/16
6	10-1/2	13-1/4	11	16	1	8 x 3/4	9-1/2	16-1/2	9	2-5/16	1-1/8	2-3/8	2-15/16
8	11-1/8	13-15/16	13-1/2	18	1-1/8	8 x 3/4	11-3/4	19	10-1/8	2-3/4	1-1/8	2-7/16	3-13/16
10	12-7/8	16-1/8	16	18-1/8	1-3/16	12 x 7/8	14-1/4	22	11-7/8	3-3/8	1	3-3/16	4-1/8
12	15	18-1/2	19	21	1-1/4	12 x 7/8	17	25-3/4	13-1/2	4-1/16	1-1/8	3-3/16	3-7/8
14	17-3/8	20-5/8	21	26-1/4	1-3/8	12 x 1	18-3/4	29-3/4	15-1/2	4-1/2	1-5/16	3-1/4	4-1/2
16	20-1/16	23-1/4	23-1/2	27	1-7/16	16 x 1	21-1/4	32-7/8	17-1/8	4-3/4	1-7/16	3-5/16	5
18	21-9/16	24-7/8	25	29	1-9/16	16 x 1-1/8	22-3/4	36-5/8	18-3/4	4-7/8	1-9/16	3-15/16	5-9/16
20	23-5/8	27-3/4	27-1/2	32	1-11/16	20 x 1-1/8	25	39-7/8	20-1/2	4-9/16	1-5/8	5-1/4	6-1/4
24	26-1/2	29-3/4	32	37	1-7/8	20 x 1-1/4	29-1/2	44-3/4	23-7/8	4-15/16	1-15/16	5-15/16	7-3/4
30	32-1/2	35-7/16	38-3/4	46	2-1/8	28 x 1-1/4	36	55-5/8	29-1/2	5-15/16	2-3/8	6-11/16	10-7/16
36	36-7/8	41-1/16	46	54	2-3/8	32 x 1-1/2	42-3/4	65-3/8	34-1/2	6-7/16	2-5/8	7-5/8	8-3/4
42	42-1/2	47-3/16	53	59-1/2	2-5/8	36 x 1-1/2	49-1/2	75-1/2	39-7/8	8-3/8	2-7/16	9-1/16	12-7/8
48	50-3/8	58-1/16	59-1/2	72	2-3/4	44 x 1-1/2	56	86-3/4	44-5/8	7-15/16	3-5/8	9-1/2	12-5/8

ACTUATOR SIZE	J	L	M	N	P	Q	R	S	T	V	W	NUMBER OF TURNS
MDT-3S	5-5/8	2-7/16	3-1/4	3-5/32	5-5/8	5-3/8	10-3/8	10-1/2	10-1/8	12	9-1/8	30
MDT-4S	6-3/8	2-27/32	3-3/8	4	7-5/16	6-3/4	11-5/16	11-1/2	11	12	9-1/8	40
MDT-5	7-9/16	3-15/32	4-1/2	5-1/2	8-3/4	10	17	17 3/16	17-3/16	18	16-7/16	44
MDT-5S	8-5/16	3-15/16	5-1/2	7	10-1/2	15-15/16	19-7/8	20	19-13/16	24	22-1/4	136
MDT-6S	9-7/8	5-1/16	7	8-1/4	12-5/8	14-3/16	26-1/2	27-3/4	27-1/2	24	22-1/4	215
MDT-10	12-13/16	5-7/8	11-15/16	11-5/8	19-1/16	19-29/32	28-1/4	33-1/4	33-1/4	24	26	526

REV.-DATE	BY	APP.	REVISION
2 3/08/10	MZ	CEM	REVISED TITLE
1 8/23/04	BZ	ES	CORRECTED VALUE

REV.-DATE	BY	APP.	REVISION
4			
3 8/7/13	JUR	RCB	REVISED TABLE